# 6206-ZNR

## Deep groove ball bearing with snap ring and integral sealing

Single row deep groove ball bearing, with snap ring groove and seals or shields on one or both sides, are particularly versatile, have low friction and are optimized for low noise and low vibration, which enables high rotational speeds. They accommodate radial and axial loads in both directions, are easy to mount, and require less maintenance than other bearing types. The snap ring, fitted in an annular groove in the outer ring, facilitates axial location of the bearings within their housings. The integral sealing can significantly prolong bearing service life because it keeps lubricant in the bearings and contaminants out.

- Snap ring facilitates axial location within housing
- Integral sealing prolongs bearing service life
- Typical benefits of single row deep groove ball bearings

## Overview

### Dimensions

| | |
|---|---|
| Bore diameter | 30 mm |
| Outside diameter | 62 mm |
| Width | 16 mm |

### Performance

| | |
|---|---|
| Basic dynamic load rating | 20.3 kN |
| Basic static load rating | 11.2 kN |
| Limiting speed | 15 000 r/min |
| Reference speed | 24 000 r/min |
| SKF performance class | SKF Explorer |

### Properties

| | |
|---|---|
| Bore type | Cylindrical |
| Cage | Sheet metal |
| Coating | Without |
| Filling slots | Without |
| Locating feature, bearing outer ring | Snap ring (fitted) |
| Lubricant | None |
| Matched arrangement | No |
| Material, bearing | Bearing steel |
| Number of rows | 1 |
| Radial internal clearance | CN |
| Relubrication feature | Without |
| Sealing | Shield on one side |
| Sealing type | Non-contact |

# Technical Specification

| SKF performance class | SKF Explorer |
|---|---|

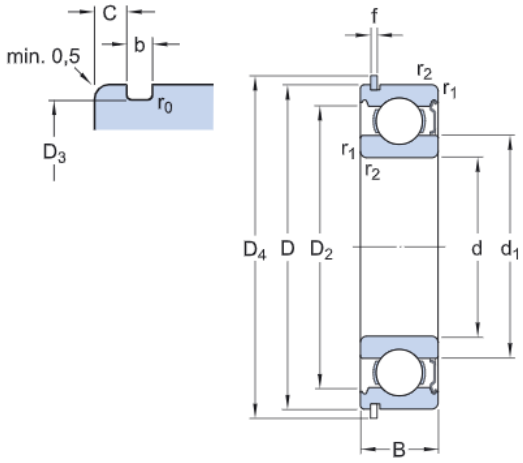


## Dimensions

| | | |
|---|---|---|
| d | 30 mm | Bore diameter |
| D | 62 mm | Outside diameter |
| B | 16 mm | Width |
| $d_1$ | ≈ 40.36 mm | Shoulder diameter |
| $D_2$ | ≈ 54.06 mm | Recess diameter |
| $D_3$ | 59.61 mm | Diameter of snap ring groove |
| $D_4$ | 67.7 mm | Outside diameter of snap ring |
| b | 1.9 mm | Width of snap ring groove |
| C | 3.28 mm | Distance outer ring from side face to snap ring groove |
| f | 1.7 mm | Width of snap ring |
| $r_0$ | max. 0.6 mm | Bottom radius of snap ring groove |
| $r_{1,2}$ | min. 1 mm | Chamfer dimension |

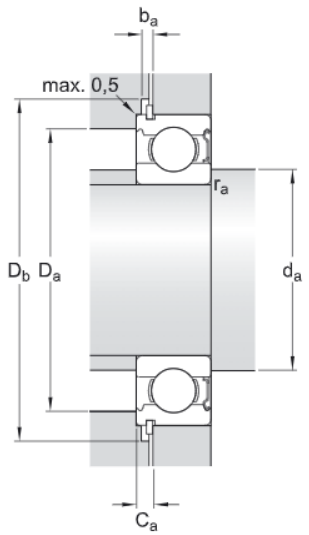


## Abutment dimensions

| | | |
|---|---|---|
| $d_a$ | min. 35.6 mm | Diameter of shaft abutment |
| $d_a$ | max. 40.3 mm | Diameter of shaft abutment |
| $D_a$ | max. 56.4 mm | Diameter of housing abutment |
| $D_b$ | min. 69 mm | Diameter of snap ring recess in the housing |
| $b_a$ | min. 2.2 mm | Width of snap ring recess in the housing |

| | | |
|---|---|---|
| $C_a$ | max. 4.98 mm | Distance from outer ring side face to snap ring back face |
| $r_a$ | max. 1 mm | Radius of shaft or housing fillet |

## Calculation data

| | | |
|---|---|---|
| Basic dynamic load rating | C | 20.3 kN |
| Basic static load rating | $C_0$ | 11.2 kN |
| Fatigue load limit | $P_u$ | 0.475 kN |
| Reference speed | | 24 000 r/min |
| Limiting speed | | 15 000 r/min |
| Minimum load factor | $k_r$ | 0.025 |
| Calculation factor | $f_0$ | 14 |

## Mass

| | |
|---|---|
| Mass bearing | 0.21 kg |

## Included products

| | |
|---|---|
| Snap ring | SP 62 |

## Tolerance class

| | |
|---|---|
| Dimensional tolerances | P6 |
| Radial run-out | P6 |

# Terms and conditions

By accessing and using this website / app owned and published by AB SKF (publ.) (556007-3495 · Gothenburg) ("SKF"), you agree to the following terms and conditions:

## Warranty Disclaimer and Limitation of Liability

Although every care has been taken to assure the accuracy of the information on this website / app, SKF provides this information "AS IS" and DISCLAIMS ALL WARRANTIES, EXPRESS OR IMPLIED, INCLUDING, BUT NOT LIMITED TO, IMPLIED WARRANTIES OF MERCHANTABILITY AND FITNESS FOR A PARTICULAR PURPOSE. You acknowledge that your use of this website / app is at your sole risk, that you assume full responsibility for all costs associated with use of this website / app, and that SKF shall not be liable for any direct, incidental, consequential, or indirect damages of any kind arising out of your access to, or use of the information or software made available on this website / app. Any warranties and representations in this website / app for SKF products or services that you purchase or use will be subject to the agreed upon terms and conditions in the contract for such product or service. Further, for non-SKF websites / apps that are referenced in our website / app or where a hyperlink appears, SKF makes no warranties concerning the accuracy or reliability of the information in these websites / apps and assumes no responsibility for material created or published by third parties contained therein. In addition, SKF does not warrant that this website / app or these other linked websites / apps are free from viruses or other harmful elements.

## Copyright

Copyright in this website / app copyright of the information and software made available on this website / app rest with SKF or its licensors. All rights are reserved. All licensed material will reference the licensor that has granted SKF the right to use the material. The information and software made available on this website / app may not be reproduced, duplicated, copied, transferred, distributed, stored, modified, downloaded or otherwise exploited for any commercial use without the prior written approval of SKF. However, it may be reproduced, stored and downloaded for use by individuals without prior written approval of SKF. Under no circumstances may this information or software be supplied to third parties.
This website /app includes certain images used under license from Shutterstock, Inc.

## Trademarks and Patents

All trademarks, brand names, and corporate logos displayed on the website / app are the property of SKF or its licensors, and may not be used in any way without prior written approval by SKF. All licensed trademarks published on this website / app reference the licensor that has granted SKF the right to use the trademark. Access to this website / app does not grant to the user any license under any patents owned by or licensed to SKF.

## Changes

SKF reserves the right to make changes or additions to this website / app at any time.